Reverse unit works on AC, DC, and AC/DC.

For Dual Motor and DC Can Motors

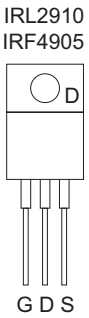

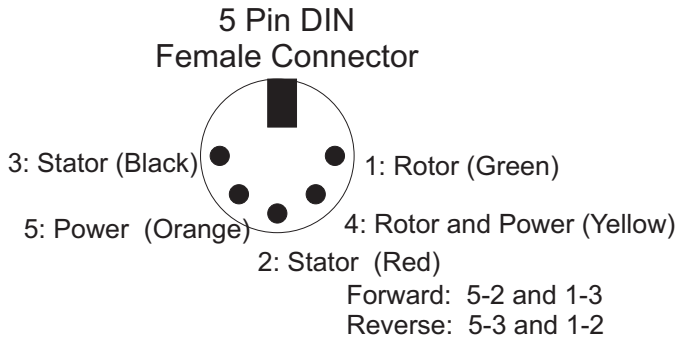

With switch in Auto mode train travels
Forward when provided AC power or
DC if the DPDT switch is pointed to the + rail
Reverse when provided DC power and
the DPDT switch is pointed to the - rail.

Note: Diodes
across S-D are
part of Transistor
Package

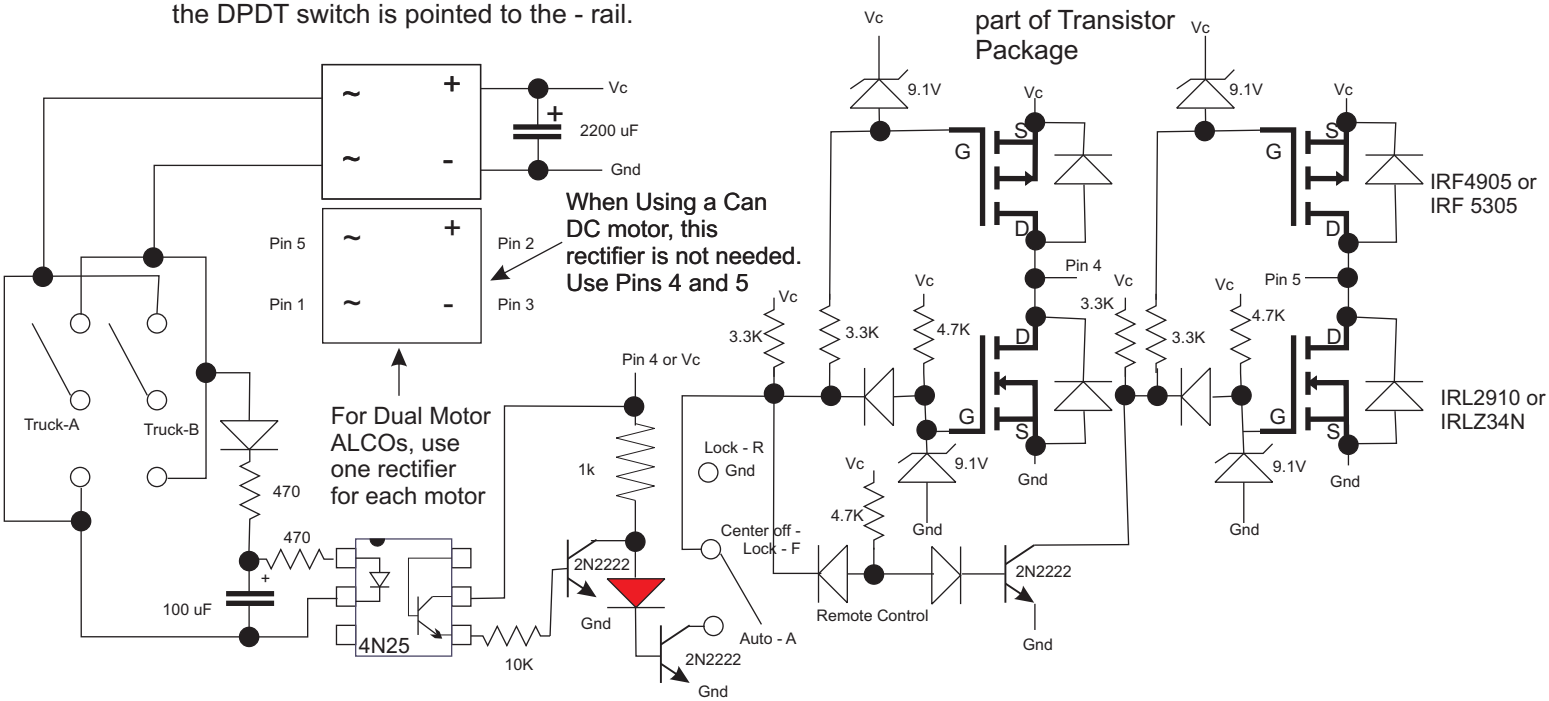

1.6 by 4.8

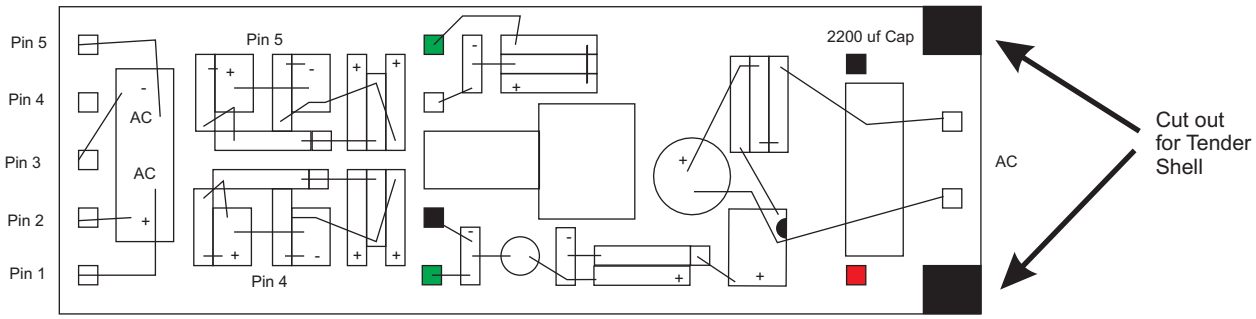

Power FET Based AC-DC Reversing Unit

Norbert Doerry

Oct 2011, Rev 1 Dec 2011